Solutions - Quiz 2

(February 9th @ 5:30 pm)

Problem 1 (35 pts)

- Complete the following table. Use the fewest number of bits in each case:

REPRESENTATION			
Decimal	**Sign-and-magnitude**	**1's complement**	**2's complement**
-20	110100	101011	101100
37	0100101	0100101	0100101
-16	110000	101111	10000
-32	1100000	1011111	100000

- Convert the following decimal number to its 2's complement representation: -16.625 (5 pts)

$16.625 = 010000.101_2 \rightarrow -16.3125 = 101111.011_2$

Problem 2 (30 pts)

- Implement the following function using ONLY 2-to-1 MUXs (AND, OR, NOT gates are not allowed):

$$f(x,y,z) = x \oplus y \oplus z$$

$f(x,y,z) = \bar{x}f(0,y,z) + xf(1,y,z) = \bar{x}(y \oplus z) + x(\overline{y \oplus z}) = \bar{x}g(y,z) + xh(y,z)$
$g(y,z) = \bar{y}g(0,z) + yg(1,z) = \bar{y}(z) + y(\bar{z})$
$h(y,z) = \bar{y}h(0,z) + yh(1,z) = \bar{y}(\bar{z}) + y(z)$
$\bar{z} = \bar{z}(1) + z(0)$

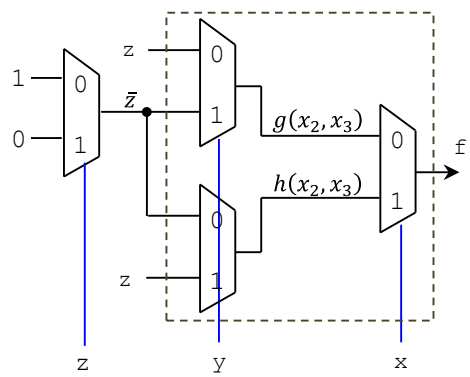

Problem 3 (35 pts)
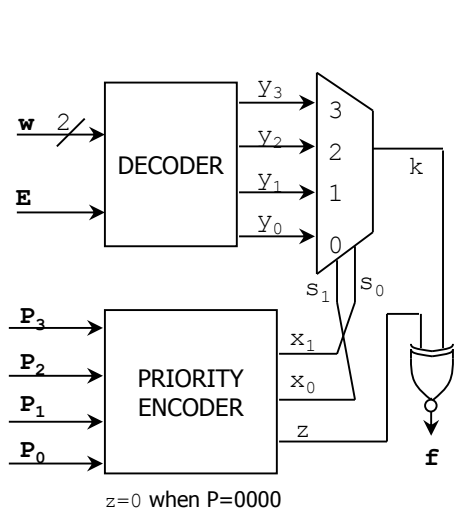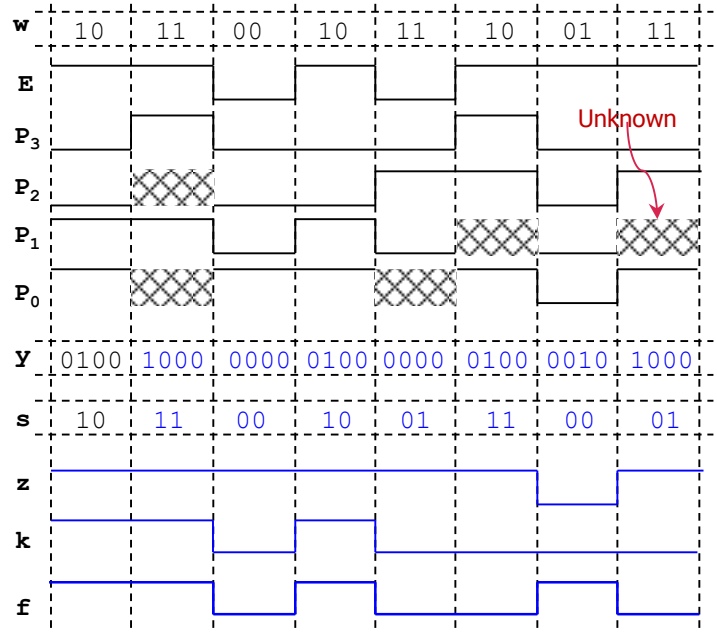
- Complete the timing diagram of the circuit shown below: